WAFER TYPE ZW-01



TECHNICAL DATA

Size Range	NPS 1" to 24" | DN 25 to DN 600
Seat Style	Soft Replaceable
Pressure Rating	PN6 | PN10 | PN16 | PN25 | CL150 | JIS 10K
Flange Drilling	PN6 | PN10 | PN16 | ASME B16.5 CL150 | JIS 10K
Face to Face	EN558-20 | ISO 5752-20 | API 609 Table 1 | BS 5155-4
Top Flange	ISO 5211
Tightness Test	ISO 5208 | API 598 | EN 12266-1

DRAWING

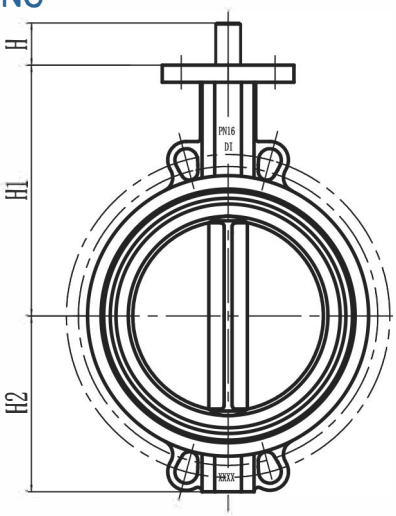

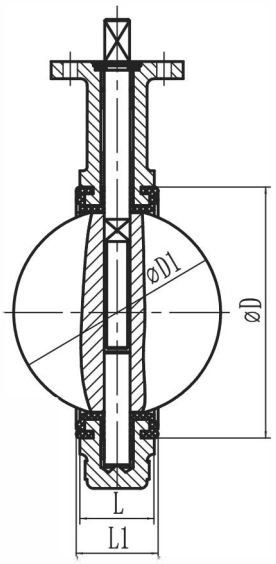

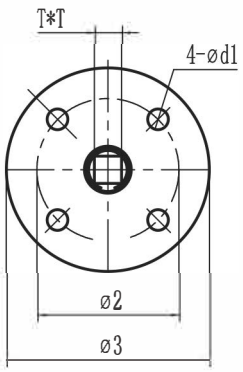

DIMENSIONS

SIZE	øD	øD1	L	L1	H	H1	H2	ø2	ø3	4-ød1	T*T
DN25	55	33	26	29	30	122	48	50	65	7	11
DN40	65	43.1	33	36	30	139	70	50	65	7	11
DN50	82	53.08	42.5	46.1	30	140	60	70	90	10	11
DN65	94	64.82	45.6	49	30	150	67	70	90	10	11
DN80	111.2	79.04	45.6	50	30	160	87	70	90	10	11
DN100	140	104.04	52	56	30	180	105	70	90	10	11
DN125	166	123.3	56	60	30	190	118	70	90	10	14
DN150	187	155.68	56	60	30	210	130	70	90	10	14
DN200	246.8	201.9	60	64	35	235	166	102	125	12	17
DN250	301.5	250.45	68	72	35	270	197	102	125	12	22
DN300	352	301.55	78	83	35	305	231	102	125	12	22
DN350	390	333.8	78	83	35	360	255	125	150	14	22
DN400	452	389	102	106	50	381	293	140	175	18	27
DN450	510	439.2	114	118	50	425	325	140	175	18	27
DN500	564	491.4	127	132	50	470	363	140	175	18	36
DN600	651	579	153	159	60	565	425	165	210	22	36

* Please consult our sales staff to obtain detailed dimensions for other specifications.