TRIPLE ECCENTRIC WAFER TYPE ZTPW-01

TECHNICAL DATA

Size Range	NPS 2" to 24" | DN 50 to DN 600
Features	Triple Offset
Pressure Rating	PN6 | PN10 | PN16 | PN25 | CL150 | JIS 10K
Flange Drilling	PN6 | PN10 | PN16 | ASME B16.5 CL150 | JIS 10K
Face to Face	EN558-20 | ISO 5752-20 | API 609 Table 1 | BS 5155-4
Top Flange	ISO 5211
Tightness Test	ISO 5208 | API 598 | EN 12266-1



DRAWING

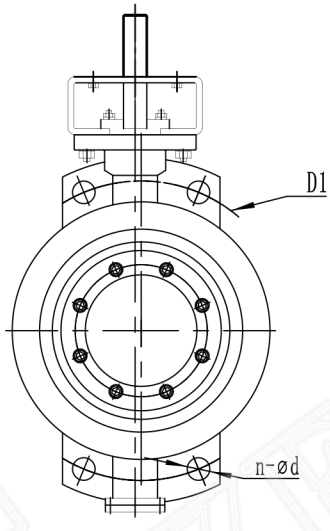

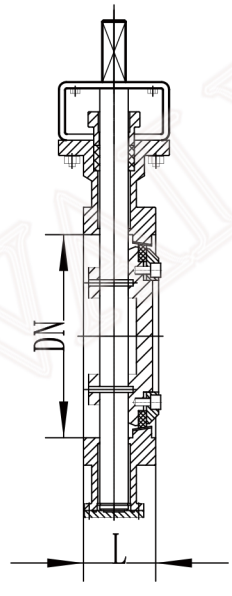

DIMENSIONS

SIZE	PN16			150LB		
	D1	n-ød	L	D1	n-ød	L
DN100	180	8-ø18	56±2	191	8-ø19	54±3.3
DN125	210	8-ø18	64±2	216	8-ø22	56±3.3
DN150	240	8-⌀22	70±2	241	8-ø22	57±3.3
DN200	295	12-⌀22	71±2	299	8-⌀22	64±3.3
DN250	355	12-⌀26	76±2	362	12-⌀26	71±3.3
DN300	410	12-⌀26	83±2	432	12-⌀26	81±3.3
DN350	470	16-⌀26	92±2	476	12-ø29	92±3.3
DN400	525	16-⌀30	102±2	540	16-⌀29	102±3.3
DN450	585	20-⌀30	114±2	578	16-⌀32	114±3.3
DN500	650	20-⌀33	127±2	635	20-ø32	127±3.3
DN600	770	20-ø36	154±2	749	20-⌀35	154±4.0

* Please consult our sales staff to obtain detailed dimensions for other specifications.